433 Trigger Latch

Features
- Non-locking trigger latch with mounting plate
- Push button design, single point compression
- Designed for a variety of panel applications, a push of the button releases the latch allowing entry into the panel compartment

Material
- Case: Carbon steel, zinc plated
- Trigger & button: UV stabilized composite, matt black
- Springs: Stainless steel, plain finish
- Roll pins: Carbon steel, zinc plated

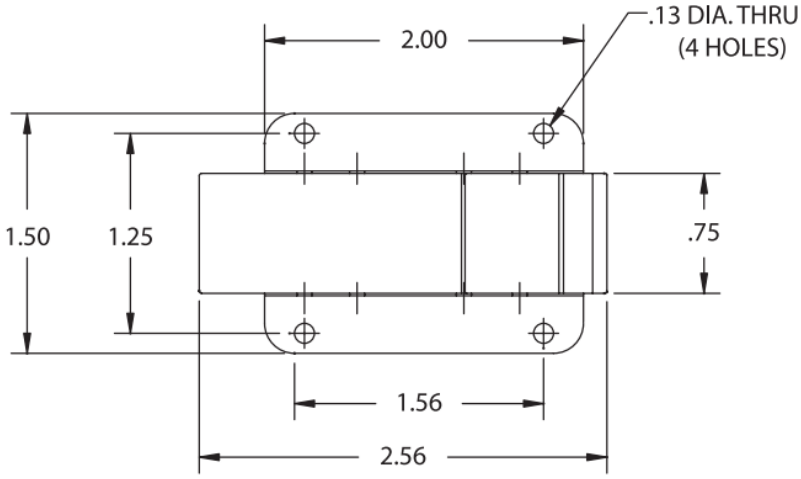

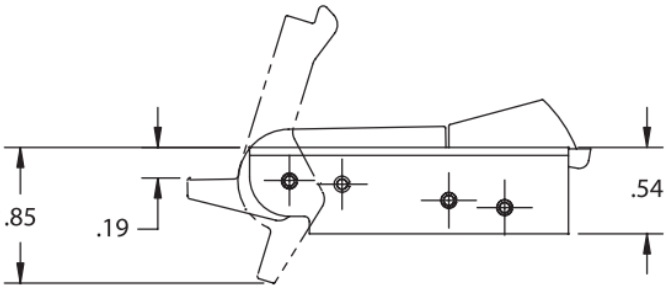

Part No.
1-433

Dimensions in inches

EBERHARD MANUFACTURING COMPANY
We are Eberhard's exclusive distributor